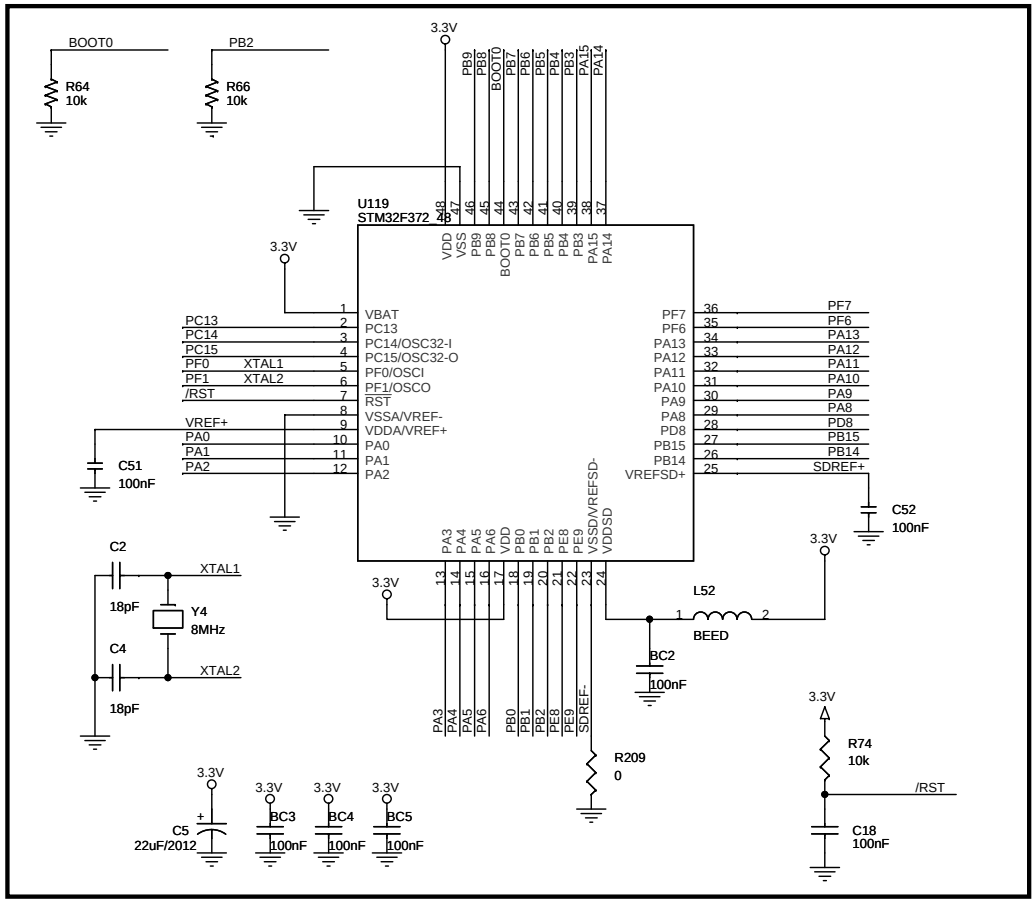

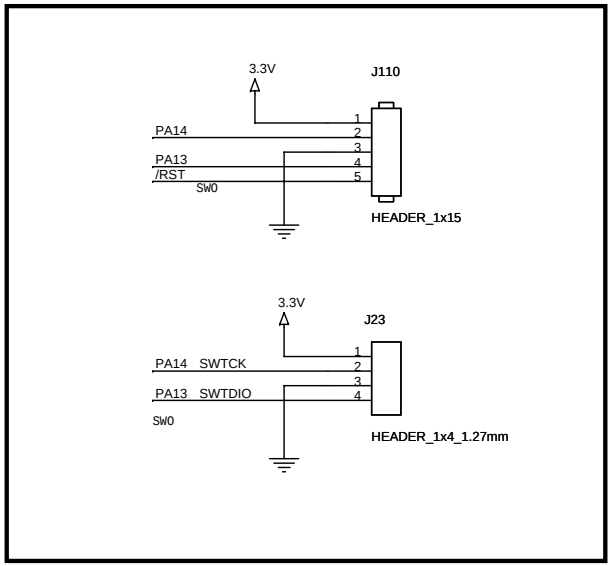

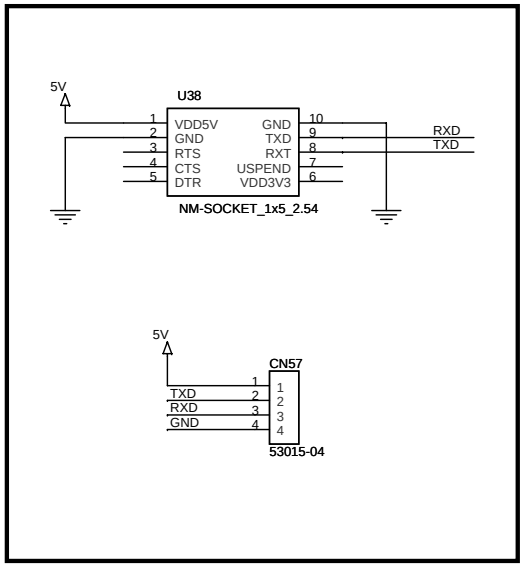

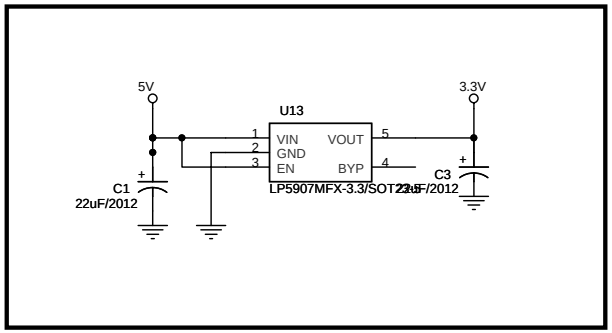

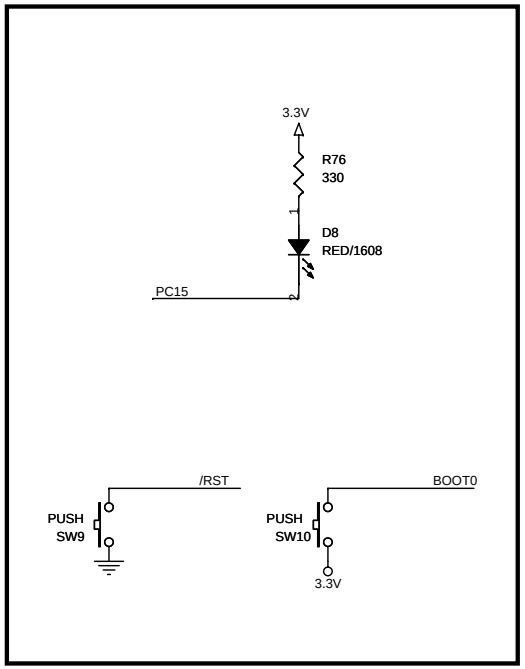

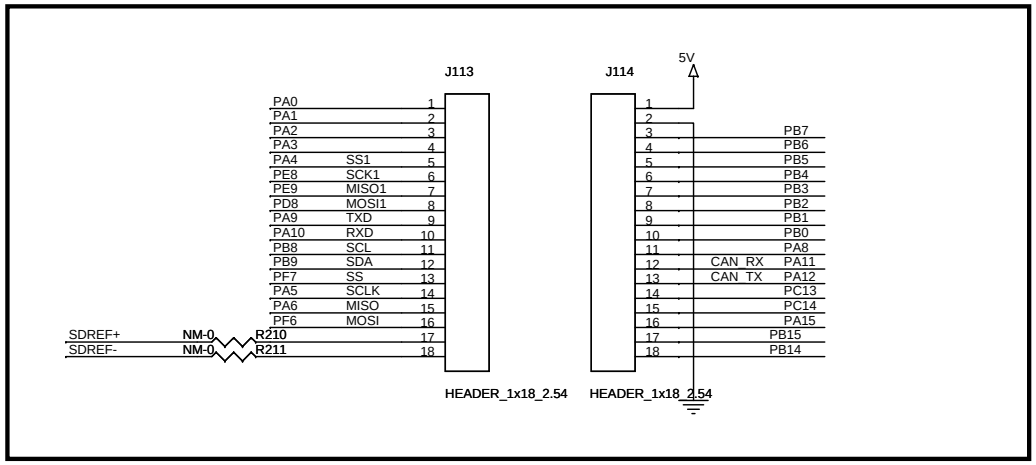

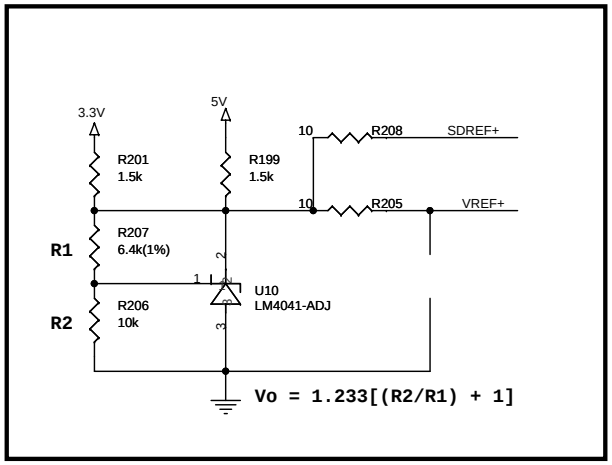

Title

STM32F372 EVM

Size	Document Number	Rev
B	http://nexp.tistory.com	<RevCode>

Date: Friday, June 09, 2017 Sheet 1 of 1