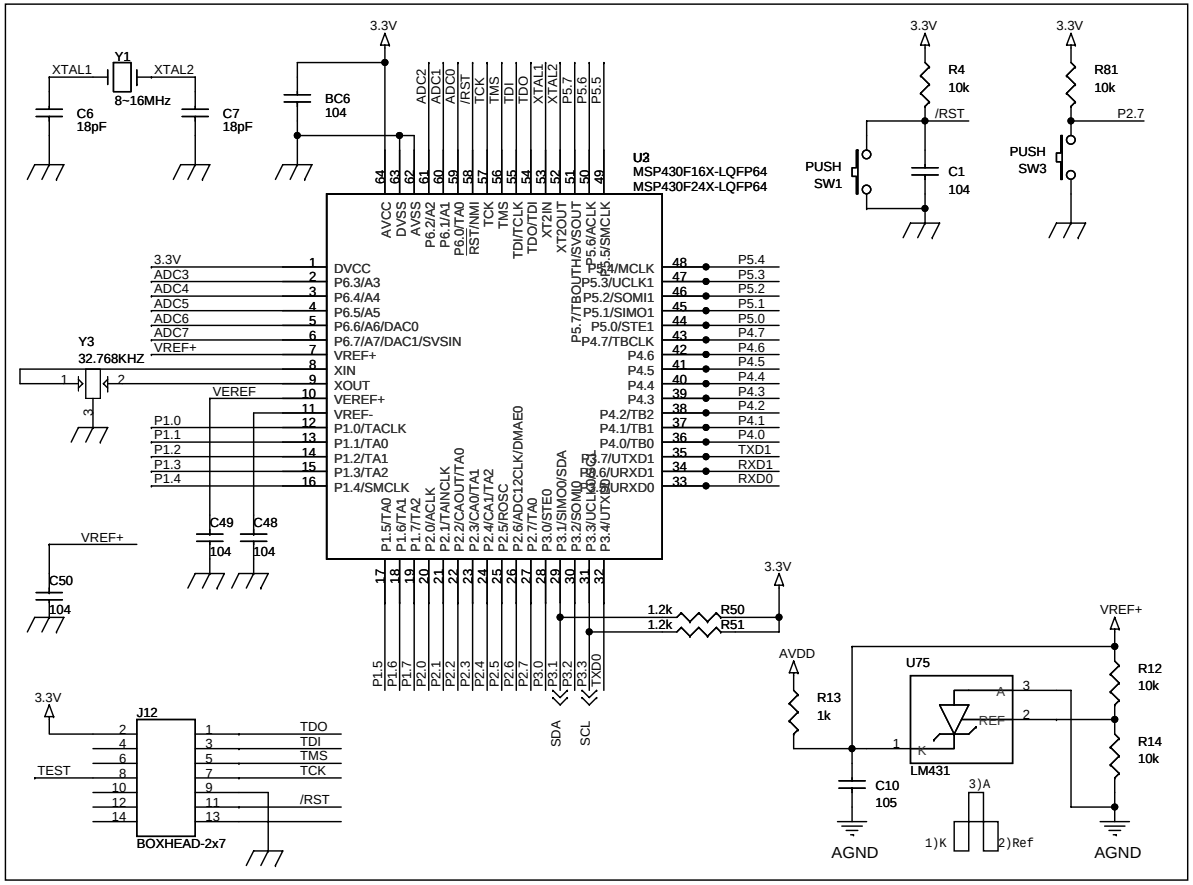

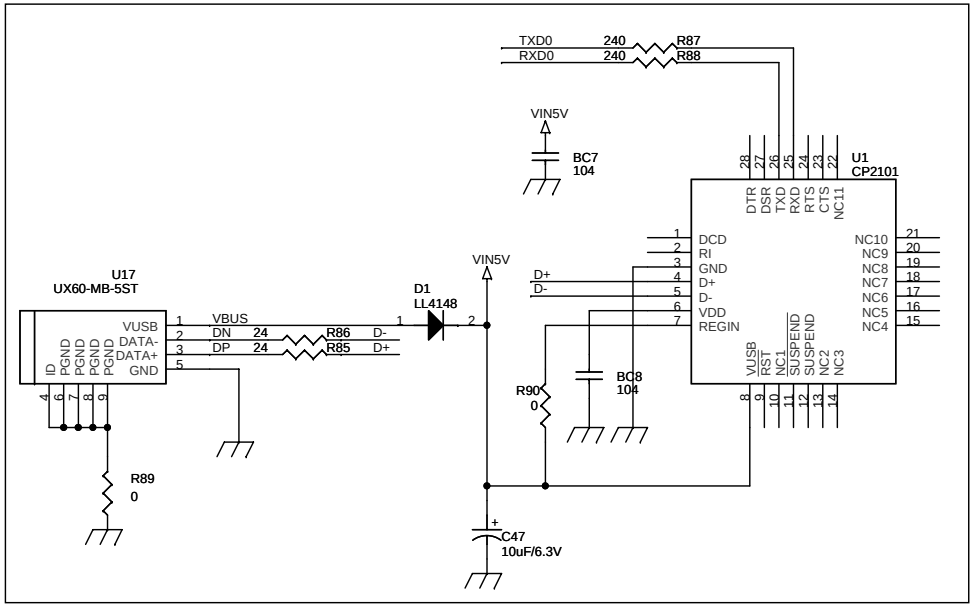

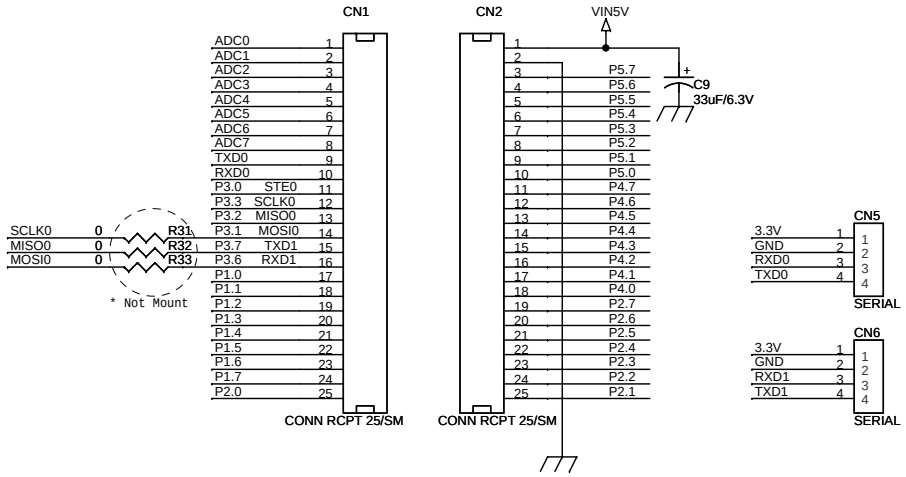

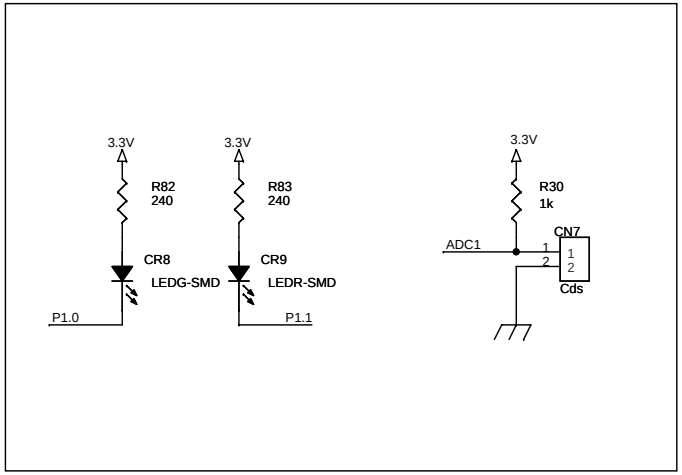

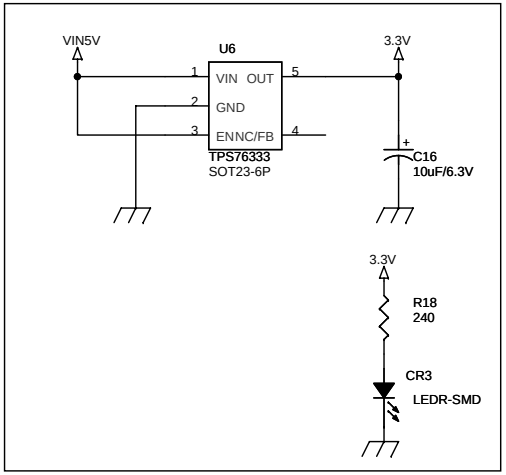

Title	MSP430 EVM ver4.0	
Size B	Document Number <by http://cafe.naver.com/elab>	Rev 0.1
Date: Friday, May 16, 2008	Sheet 2 of 10	